RM33 BLIZZARD

Waterworks™

The thirst quenchers!™

- ✓ NEW IP33 RATING
- ✓ Designed in Australia by Waterworks®
- ✓ 100% rust proof cabinet
- ✓ Impact resistant construction
- ✓ 30L of chilled water per hour
- ✓ Optional bottle filler
- ✓ Optional filtration
- ✓ Expansion valve to protect from mains water pressure surges
- ✓ 12 Month comprehensive warranty

WaterMark
WMTS-105
WM-022542

Design Registration No. 158110.
Unit depicted has optional Glass Filler fitted.

RM33 BLIZZARD

RUST PROOF CABINET

The new IP33 rating gives extra protection against dust, dirt and moisture, making the RM33 Blizzard perfect for construction sites, schools and mines. Unit must be protected from the elements.

TANK

1.9litre stainless steel tank.

SERVICE ACCESS

The front access panel is secured with four concealed stainless steel screws. Removal of this panel provides access for any purpose including service, maintenance and filter replacement.

VANDAL RESISTANCE

The RM33 Blizzard has a one piece rota moulded polyethylene cabinet which can be easily anchored to almost any surface. Along with the internally fitted drain, this provides unequalled vandal resistance.

OPTIONAL FEATURES:

FILTRATION

An internal or external Waterworks filter will reduce sediment, chemicals, organic compounds and impurities which can adversely affect the quality and taste of your drinking water. If a filter is required, please specify on order.

TEMPORARY DRAIN KIT

1.5mtr temporary drain kit is available for temporary installations such as construction sites.

INSTALLATION CONNECTIONS:

ELECTRICAL

A 1.5 metre power cord with standard 3 pin plug is provided. Power consumption Ambient Temp 25deg. (kw.h/24h) 0.044. **Power cord inlet 300mm from base on rear of unit.**

WATER INLET

The inlet is an industry standard 1/2" female BSP threaded connection situated on the rear of the cooler, (see installation instructions for exact rough in details).

DRAIN OUTLET

The drain outlet and integrated p-trap provide an industry standard 40mm connection situated on the rear of the cooler. (see installation instructions for exact rough in details).

To be installed in accordance with local plumbing laws. Failure to install a certified Pressure Limiting Valve will void warranty.

WARRANTY:

The warranty provides comprehensive parts and labour coverage for the period of 12 months from the date of original sale.

SHIPPING DETAILS:

PACKED WEIGHT: 28kg
PACKED VOLUME: 0.208M3
PACKED DIMENSIONS: 420mmW x 420mmD x 1180mmH

ORDERING CODES:

CODE	DESCRIPTION
RM33	RM Blizzard with bubbler tap only
RM33GF	RM Blizzard with bubbler tap and glass filler

CAPACITY:

MODEL NUMBER	AMBIENT TEMP	INLET TEMP	LITRES/HR 10°C WATER	RESERVOIR VOLUME
RM33	32°C	27°C	30 LPH	1.9 Litre

* Based on intermittent use under environmental conditions of ARI Standard 1010 and installation requirements of ARI Standard 1020.

** Due to our policy of continuous development, specifications are subject to change without notice.

*** Colour is as close to actual as printing processes allow.

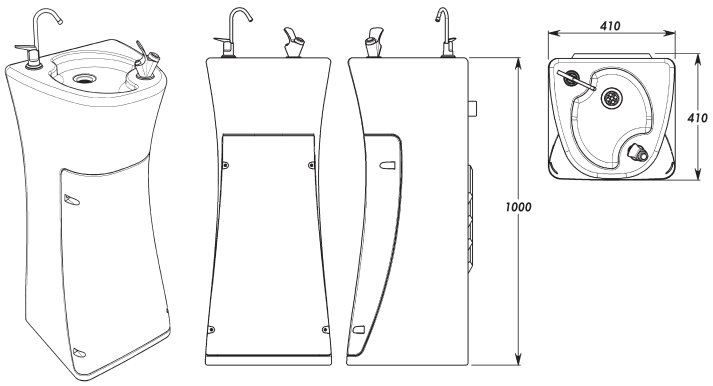

INLET:
860mm ABOVE BASE
100mm LEFT OF CENTRE LINE
(from back)

OUTLET:
860mm ABOVE BASE
30mm LEFT OF CENTRE LINE
(from back)

Distributed by PASLR

PASLR
Your Crucial Services. Sorted.

15 Saturn Place (Unit D)
Rosedale, Auckland 0632

www.paslr.co.nz
service@paslr.co.nz

0800 255 786
09 414 3668

Waterworks Australia
ABN 91 902 793 936
48-50 Neumann Road Capalaba Queensland 4157
Bulk Warehouse: 53 Neumann Road Capalaba Queensland 4157

Phone (07) 3390 3777
Email sales@waterworksaustralia.com
www.waterworksaustralia.com

As part of Waterworks Australia's policy of continuous improvement, we reserve the right to alter specifications at anytime without notice.